RPG 4700 Coil On Plug Wiring Schematic

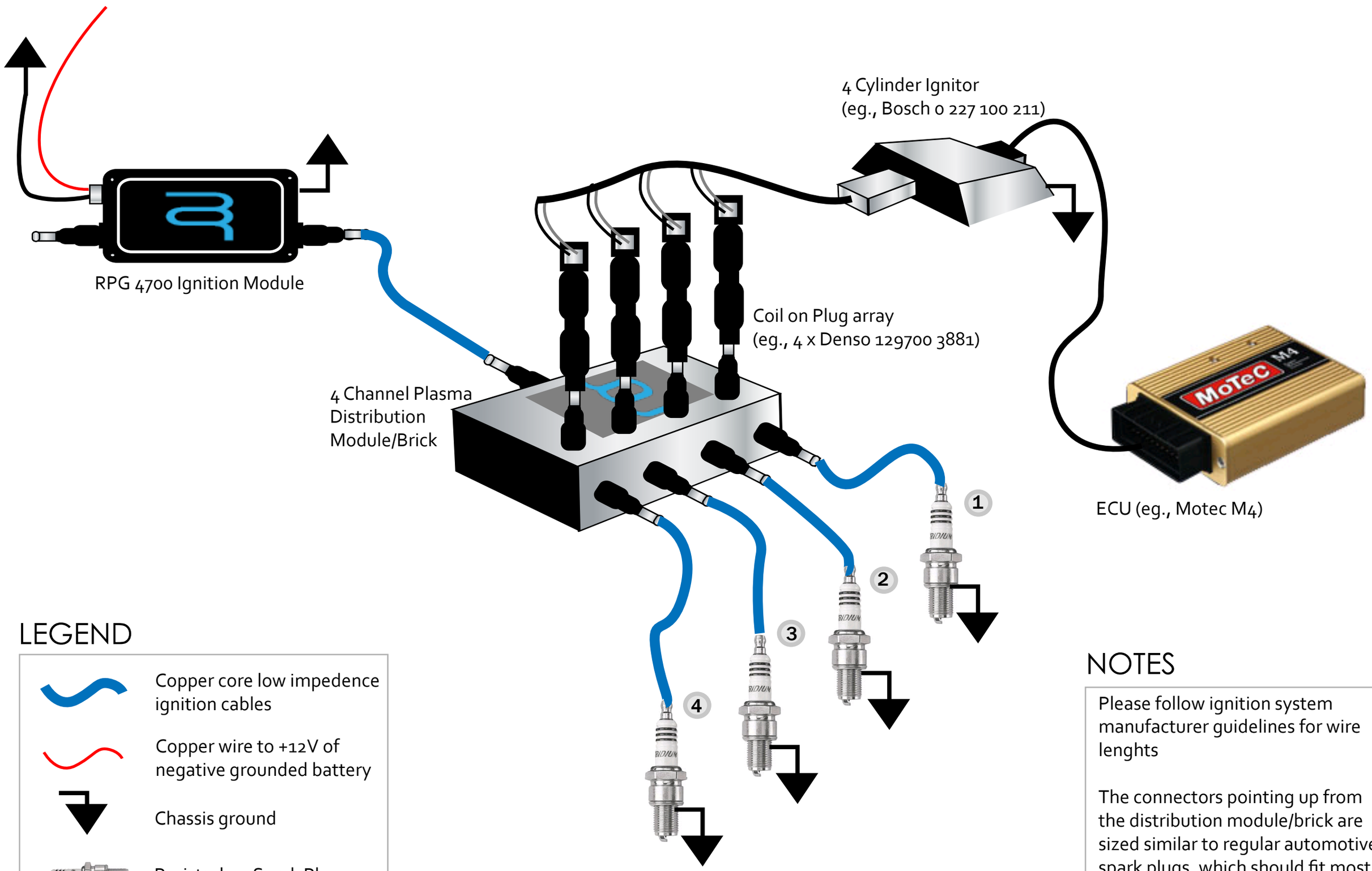

LEGEND

- Copper core low impedence ignition cables
- Copper wire to +12V of negative grounded battery
- Chassis ground
- Resistorless Spark Plug

NOTES

Please follow ignition system manufacturer guidelines for wire lenghts

The connectors pointing up from the distribution module/brick are sized similar to regular automotive spark plugs, which should fit most COP boots.